GeoS-5 RTK®

High precision GNSS module

Datasheet

Rev.1.1

R&D “GeoStar navigation” Ltd.
Moscow, 2018

Table of Contents

List of Figures

Revision History

#	Updates	Notes
Rev. 1.0 07/03/2018		
1	Initial release	
Rev. 1.1 15/06/2018		
1	Chapter 2.5 updated: VDD voltage changed to 3.3V	
2	Chapter 2.8 updated: serial ports baud rate values corrected	
3	NRESET signal description added (chapter 2.12)	
4	Chapters 3.1, 3.2, 3.4 updated	
5	Added lists of supported binary messages (3.5.2) and NMEA messages (3.5.3)	
6	Editorial corrections	

1 Abbreviations

C/A:	Coarse Acquisition
CEP:	Circular Error Probable
DGNSS:	Differential GNSS
DOP:	Dilution Of Precision
ECEF:	Earth Centered Earth Fixed
ESD:	Electro Static Discharge
EVK:	Evaluation Kit
FW:	Firmware
GNSS:	Global Navigation Satellite System
HBM:	Human Body Model
HW:	Hardware
I/O:	Input/Output
LNA:	Low Noise Amplifier
LVCMOS:	Low Voltage CMOS
MSM:	Multiple Signal Messages
PCB:	Printed Circuit Board
PVT:	Position Velocity Time
QR:	Quick Response
RF:	Radio Frequency
RMS:	Root Mean Square
RoHS:	Restriction of Hazardous Substances
RTC:	Real Time Clock
RTCM:	Radio Technical Commission for Maritime Services
RTK:	Real Time Kinematic
SAW:	Surface Acoustic Waves
SRAM:	Static Random Access Memory
SV:	Space Vehicle
TCXO:	Thermo Compensated Crystal Oscillator
TTFF:	Time To First Fix
UART:	Universal Asynchronous Receiver Transmitter
UHF:	Ultra High Frequency
UTC:	Universal Time Coordinated
1PPS:	One Pulse Per Second
2D/3D:	Two-Dimensional/Three-Dimensional

2 General Description

2.1 Overview

GeoS-5 RTL is L1 GLONASS/GPS high precision module with RTK capability. It features 44 parallel tracking channels, enhanced fast acquisition sub-system and embedded RTK core that provide high sensitivity, fast TTFF and differential RTK positioning with up to 5Hz update rate. The module can operate in autonomous and differential modes.

The module can work as reference station or rover.

The interfaces include two full-duplex serial ports with programmable settings. The module supports proprietary binary protocol, standard NMEA protocol as well as RTCM v3.x protocol for transmitting/receiving differential corrections. In addition to PVT, GeoS-5 RTK outputs one pulse per second signal for precise timing synchronization.

2.2 Key Highlights

- Concurrent processing of GLONASS and GPS;
- Autonomous and differential operation modes;
- Code-differential (DGNSS) and phase-differential (RTK) modes;
- Reference station and rover configurations;
- Reference station: RTCM v3.2 output;
- Rover: support of RTCM v3.0, v3.1, v3.2 formats;
- RTK positioning accuracy: 1-2 cm (typ.);
- Power consumption: <210 mW (acquisition), <160 mW (RTK solution);
- Built-in active antenna bias circuit with monitor and short circuit protection;
- Form-factor compatible with GeoS-3 module;
- Evaluation tools: GeoS-5 RTK EVK, GeoS-5 RTK UHF EVK.

2.3 Block Diagram

The module comprises following major elements (Figure 1):

- Navigation processor;
- RTK processor;
- SPI Flash memory;
- Two RF SAW filters;
- Reference oscillator (TCXO);
- 32.768KHz crystal;
- ESD protection circuitry (not shown).

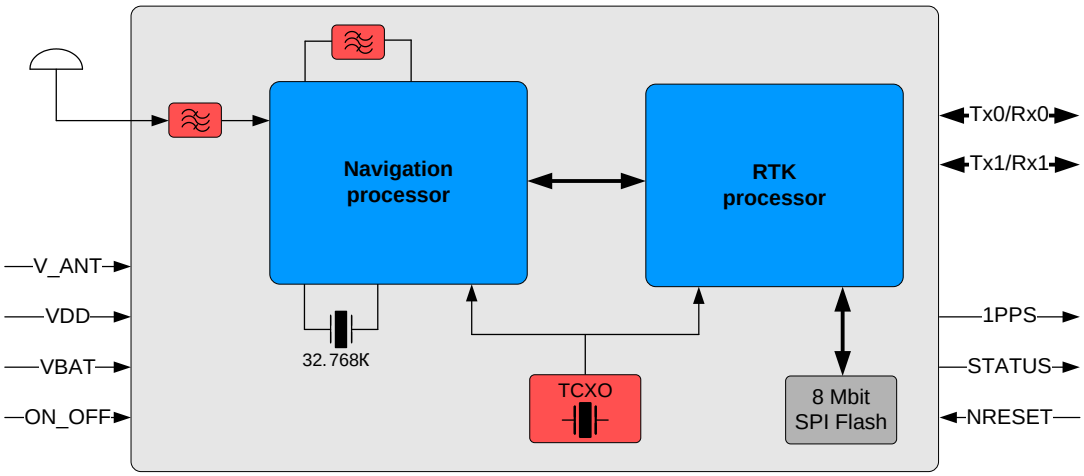

Figure 1. Block diagram

2.3.1 RTC, Backup SRAM

RTC is clocked with 32.768KHz and counts real time. Backup SRAM stores ephemeris, current time and position data. RTC and backup SRAM are allocated in battery power domain and continue operation in case the main power is off. Both blocks are key elements to provide warm/hot start.

2.3.2 Flash Memory

8Mb Flash memory is used for storing following data:

- Firmware code;
- Module configuration and settings;
- Navigation system almanacs.

Firmware can be updated via serial port by using binary protocol.

2.4 Pin Assignment

Table 1. The pin list

Pad #	Type	Name	Function
1, 2, 3, 4		NC	Not connected
5, 6		GND	Ground
7	I	ON_OFF	Remote control input
8	I/O	SDA	I2C: data (for future use)
9	I	RX0	Receive data, Port #0
10	O	TX0	Transmit data, Port #0
11	I	RX1	Receive data, Port #1
12	O	TX1	Transmit data, Port #1
13	I	NRESET	External reset input
14	O	STATUS	Module status indicator
15	O	SCL	I2C: clock (for future use)
16	I	MISO	SPI: input data (for future use)
17	O	MOSI	SPI: output data (for future use)
18	O	SCK	SPI: clock (for future use)

Pad #	Type	Name	Function
19	O	NSS	SPI: slave select (for future use)
20	O	1PPS	1PPS output
21	I	VBAT	Backup battery voltage
22	I	VDD	Main supply voltage
23		NC	Not connected
24		GND	Ground
25	I	V_ANT	Antenna bias voltage
26, 27, 29, 30		GND	Ground
28	I	ANT	Antenna port

2.5 Supply Voltage

The module requires single supply voltage (VDD) 3.3V; 50mV p-p amplitude ripple (maximum).

To enable warm/hot start, backup battery voltage should be connected to VBAT pin. If no use, VBAT pin may be left unconnected.

2.6 Biasing Active Antenna. Antenna Monitor

V_ANT pin is intended for applying external antenna supply voltage. The voltage at V_ANT pin comes to antenna monitor circuitry that has integrated power switch with programmable control capability. The power switch output provides bias voltage at ANT pin to feed active antenna. The bias voltage can be enabled or disabled. If enabled (default), the voltage is available at ANT pin. If disabled, the voltage is removed from ANT pin.

If not used, V_ANT pin may be left unconnected.

Additionally, the antenna monitor circuitry measures antenna load current. The measurements are compared with predefined thresholds to indicate following antenna status:

- “Not measured”: if antenna bias voltage is disabled;
- “Overload”: the antenna current is higher than 32mA (50mA limit);
- “Open”: the antenna current is lower than 3mA;
- “OK”: the current is within operating range from 3mA to 32mA.

The antenna monitor output current is limited to 50mA so that short circuit at antenna port doesn’t lead to the module damage and is indicated as “Overload”.

1. If antenna bias voltage is not applied to V_ANT (in case of using external bias circuitry), antenna current measurements might be invalid. In such case, it’s recommended to disable antenna power;
2. If active antenna has normal operating current less than 3mA or more than 32mA (and doesn’t exceed 50mA), the module will operate correctly but will report antenna failure (“Open” or “Overload”, respectively). Such report may be ignored.

Please note that the bias circuitry introduces voltage drop so that voltage at ANT port is less than that at V_ANT pin. The voltage drop depends on actual antenna current and is typically 100mV@10mA.

2.7 Power Consumption

At different operation stages the module requires different amount of supply current. Immediately after power-up, the module searches for satellites by activating fast acquisition engines so that power consumption becomes maximum. For those conditions, supply current in Table 9 is specified as “VDD supply current, acquisition”.

As soon as the signals are detected and being tracked, the number of active fast acquisition engines is decreased what leads to lowering power consumption. The module switches off the fast acquisition sub-system completely only after the GNSS almanacs have been collected and all signals are being tracked. For those conditions, supply current in Table 9 is specified as "VDD supply current, RTK solution".

In real conditions, actual supply current depends on the following conditions:

- Type of start (cold/warm/hot/reacquisition);
- Received signal levels;
- Signal reception conditions;
- Availability of fresh GNSS almanacs in the module memory.

2.8 Serial Ports

The module has two serial ports (UART) designates as Port #0 and Port #1. The parameters of both ports can be set individually as follows:

- Baud rate, bit/s.
  Port #0: 115200 (default), 230400, 460800, 921600; Port #1: 9600 (default), 19200, 38400, 57600, 115200, 230400, 460800;
- Stop bits: 1 (default) or 2;
- Parity: no parity (default), even, odd, mark, space.

2.9 Module Configurations

The module can work in two configurations: reference station and rover (default).

When being configured as reference station, the module generates differential corrections in compliance with RTCM v3.2 standard.

In rover configuration, the module receives and utilizes the differential corrections in any version of RTCM v3.x standard.

2.10 Assignment of Data Protocols

The module supports three data protocols: binary, NMEA and RTCM. Assignment of data protocols to serial ports is provided in Table 2.

Table 2. Assignment of data protocols to serial ports

Port #0	Port #1
Reference station	
Binary	RTCM output
Rover	
Binary	RTCM input + NMEA output

Reference documents:

- Binary protocol description "GeoS® Binary Data Protocol v4.0*";*
- NMEA protocol description "GeoS® NMEA Data Protocol v4.0".

2.11 STATUS Output

The STATUS pin indicates current state of the module: SEARCH, NAV_SINGLE, NAV_FIXED, FAILURE. This is a digital output with different timing diagrams as follows:

1. SEARCH: hardware is OK (no failures found), module is searching for satellites, no fix;

2. NAV_SINGLE: satellites have been acquired and being tracked, valid position fix is available, solution type – standard accuracy (reference station/rover) or RTK float (rover);
3. NAV_FIXED: satellites have been acquired and being tracked, valid position fix is available, solution type – RTK fixed (rover only);
4. FAILURE: hardware failure found, no fix.

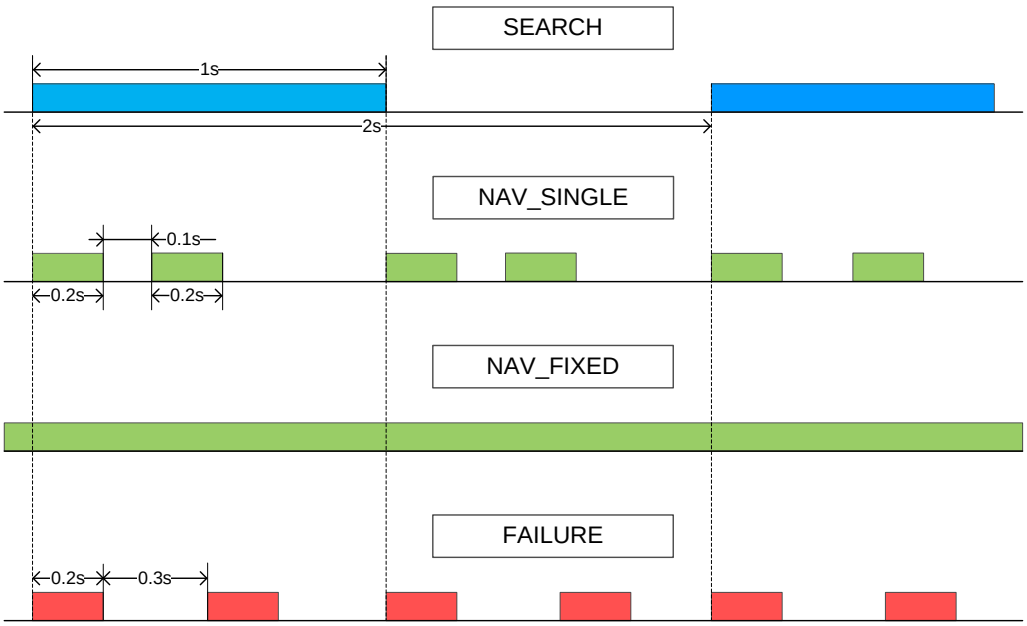

Figure 2. STATUS pin timing diagrams

2.12 NRESET Input

NRESET input is used to put the module to reset state (active low). NRESET input is internally pulled-up. If not used, it may be left unconnected.

If NRESET=0, the module outputs are driven to the following states:

- TX0, TX1: logic high;
- 1PPS: logic low;
- ACT_SLP, STATUS: logic high.

2.13 ON_OFF Control

Drive ON_OFF low for switching the module off; drive ON_OFF high or put it to Z-state for switching the module on. ON_OFF input is internally pulled-up. If not used, ON_OFF may be left unconnected.

If ON_OFF=0, the module outputs are driven to the following states:

- TX0, TX1: logic high;
- 1PPS: logic low.

If ON_OFF=0, antenna supply voltage at ANT pin is removed.

2.14 Configuration and Firmware Settings

Table 3. The list of configuration and firmware settings

#	Parameter	Default value
1	GNSS constellation	GLONASS+GPS
2	Operation mode (configuration)	autonomous/differential (rover)
3	Differential mode	RTK extrapolated
4	RTK time-out period	10 s
5	Transition time from less accurate solution (autonomous) to more accurate solution (RTK)	30 s
6	Transition time from more accurate solution (RTK) to less accurate solution (autonomous)	30 s
7	Elevation angle mask	15°
8	Signal level mask	35 dBHz
9	Output data rate	1 Hz
10	Reference station: RTCM v3.2 output message set	MSM7
11	Reference station: 107x/108x output rate	1 s
12	Reference station: 1006 output rate	10 s
13	Reference station: 1033 output rate	10 s
14	Reference station: 1230 output rate	10 s
15	Serial Port #0 parameters	115200, 1 stop bit, no parity
16	Serial Port #1 parameters	9600, 1 stop bit, no parity
17	Data protocols	• Port #0: binary • Port #1: RTCM input + NMEA output
18	Pseudorange smoothing	disabled
19	SVs	all enabled
20	Antenna descriptor	UNKNOWN
21	Antenna height	0 m
22	Antenna setup ID	255
23	Antenna serial number	SEN00000000
24	Reference station ID	0
25	Reference ECEF coordinates, m	X=0.0, Y=0.0, Z=0.0
26	Local time shift relative to UTC	0
27	1PPS parameters	• enabled • polarity: positive • sync to GPS • duration: 1ms • shift: 0ns
	Antenna power	on
	NMEA messages	• NMEA v2.x • GGA, GSA, GSV, RMC

Upon receiving new configuration or FW settings input data, the module immediately saves it to the Flash memory which typically takes less than 1 second.

2.15 Active Antenna Requirements

For best quality of signal reception, using active antenna is recommended. Antenna exceeding gain should be less than 25dB. Exceeding gain is defined as antenna LNA gain minus RF cable losses.

3 Functional Description

3.1 Operation Modes

The module can operate in the following modes:

- Autonomous (standard accuracy);
- Differential;
- Coordinates hold;
- Survey-in.

In autonomous mode the module calculates position fix with standard (few meter level) accuracy. If differential mode is not disabled, as soon as differential corrections are available at Port #1 and meet required format specification, it automatically switches to differential mode.

There are two differential modes supported:

- Code-differential (DGNSS);
- RTK extrapolated. This mode employs differential corrections on carrier phase observables. RTK solution provides differential positioning with high (few centimeter level) precision.

Coordinates hold mode and survey-in mode are intended for configuring the module as reference station. If reference coordinates of the point where antenna is placed to are accurately known (with accuracy better than 20 m), coordinates hold mode can be used. In this mode, the module requires following data to be input:

- Reference XYZ coordinates of antenna phase center;
- Reference station ID;
- Antenna parameters: descriptor, setup ID, serial number and height (optionally).

If offset between reference and calculated coordinates exceeds 20 m, the module will not transit to coordinates hold mode and will not start to output differential corrections.

If reference coordinates are unknown, the survey-in mode is used which allows obtaining the approximate antenna coordinates by averaging positioning data over specified time interval. As soon as this interval is expired, the module saves averaged coordinates to the Flash memory, switches to coordinates hold mode and starts outputting differential corrections.

3.1.1 Smoothing Transitions Between Different Solution Types

Different solution types (RTK, autonomous) feature different position accuracy levels. Autonomous solution provides standard positioning accuracy (few meters). For fixed RTK solution, the achievable accuracy level is few centimeters.

While in RTK solution, if differential corrections are lost, the receiver activates the extrapolation mechanism. During extrapolation the module continues to calculate fixed RTK solution, but position accuracy tends to gradually degrade in time. As soon as position error reaches internal threshold, the receiver outputs float RTK flag indicating about position accuracy deterioration. Extrapolation lasts till RTK timeout period is expired and after that, if corrections are still unavailable, transits to autonomous mode. As autonomous accuracy is much worse than RTK one, during transition between different solution types the position jump will occur (Figure 3).

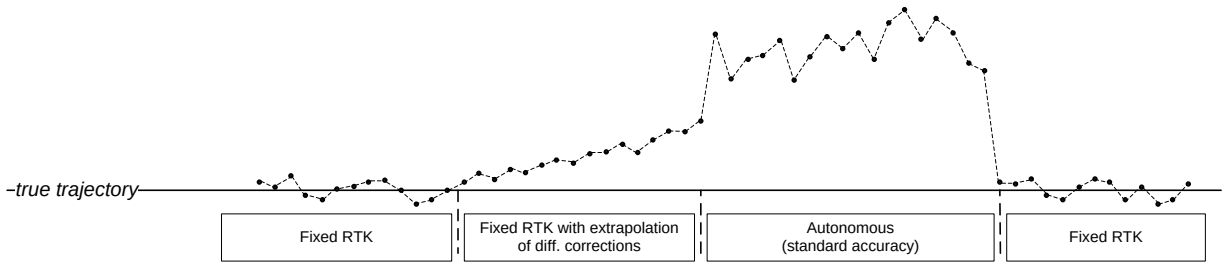

Figure 3. Instant transitions between different solution types

Applying smoothing mechanism to transitions between different solution types is intended to prevent such behavior (Figure. 4). Transition times from less accurate solution (autonomous) to more accurate solution (RTK) and vice versa are programmed separately. If this time is set to zero, smoothing is disabled.

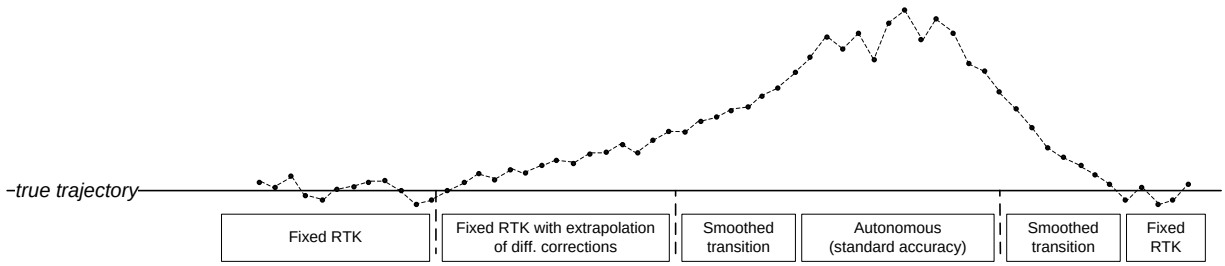

Figure 4. Smoothed transitions between different solution types

3.2 GNSS Constellations

The module operates on combined SV constellations GLONASS+GPS.

3.3 1PPS Output

The module outputs One Pulse Per Second signal at 1PPS pin. 1PPS has one second period and following programmed parameters:

- 1PPS enabled/disabled;
- Time scale to which the pulse is synchronized: GPS, GLONASS, UTC(USNO), UTC(SU);
- Polarity: positive/negative. For positive polarity, 1PPS rising edge (low-to-high transition) is synchronized to selected time scale. For negative polarity, 1PPS falling edge (high-to-low transition) is synchronized to selected time scale;
- Duration: 10us to 2ms;
- Offset: within ±0.5s.

1PPS is generated with resolution of 61ns which yields from 16.369MHz internal reference (TCXO).

3.4 Output Data Rate

Output data rate can be set to 1 (default), 2 or 5 Hz. In reference station configuration, the output data rate is always 1 Hz.

3.5 Supported Data Protocol Messages

3.5.1 RTCM Messages

3.5.1.1 Reference Station

If configured as reference station, the module outputs one of the three differential correction sets in compliance to RTCM v3.2 standard:

- MSM1: 1071/1081/1006/1033;
- MSM5: 1075/1085/1006/1033/1230;
- MSM7: 1077/1087/1006/1033/1230.

107x/108x messages period is 1 second. Period of the message 1006, 1033 and 1230 can be set individually; default is 10 seconds.

3.5.1.2 Rover

If configured as rover, the module automatically parses the input message stream and utilizes those messages that are required for specified differential mode. Supported message types (RTCM v3.x) are as follows:

- v3.0: 1004/1005/1006/1008/1012;
- v3.1: 1004/1005/1006/1008/1012/1033;
- v3.2: 1004/1005/1006/1008/1012/1033/1071-1077/1081-1087/1230.

Table 4. The list of RTCM messages

Message type	Description
1004	GPS RTK Observable Messages
1005/1006	Stationary Antenna Reference Point Messages
1008	Antenna Description Messages
1012	GLONASS RTK Observable Messages
1033	Receiver and Antenna Descriptors Message
1071	MSM1 for GPS
1072	MSM2 for GPS
1073	MSM3 for GPS
1074	MSM4 for GPS
1075	MSM5 for GPS
1076	MSM6 for GPS
1077	MSM7 for GPS
1081 – 1087	MSM1-MSM7 for GLONASS
1230	GLONASS Bias Information Messages

3.5.2 Binary Messages

The list of supported binary messages is summarized in Tables 5 and 6.

Table 5. The list of output messages

Message ID	Message
	Automatically generated messages
0x10	Raw Measurements
0x14	Timing Parameters
0x18	GPS/QZSS Almanac
0x19	GLONASS Almanac
0x1C	GPS Ionospheric Parameters
0x1D	GPS Time to UTC Conversion Parameters
0x1E	GLONASS Time to UTC Conversion Parameters
0x21	Receiver Telemetry
0x22	In View/Active SVs
0x23	RTK Output Dataset: ECEF Coordinates

Message ID	Message
0x24	RTK Output Dataset: Geographic Coordinates
0x25	RTK Output Dataset: Baseline ECEF Coordinates
0x26	Differential Corrections Reception Statistics
0x3E	Receiver Power-up Message
	Responses to settings
0x3F	Message Reception Acknowledgement
	Responses to queries
0x80	Reference ECEF Coordinates
0x81	Serial Ports Parameters
0x82	Receiver Operation Mode
0x84	Output Data Rate
0x88	GPS/QZSS Almanac(1)
0x89	GLONASS Almanac
0x8A	GPS/QZSS Ephemeris(1)
0x8B	GLONASS Ephemeris
0x8C	1PPS Parameters
0x8D	Enable/Disable SV Status
0x8E	NMEA Messages Configuration
0x8F	Binary Message Mask
0x90	Data Protocols Configuration
0x93	Local Time Offset, Leap Second
0x9C	GPS Ionospheric Parameters
0x9E	GLONASS Time to UTC Conversion Parameters
0xAF	Received Reference Station Parameters
0xB0	RTK Receiver Antenna Parameters
0xB1	RTK Receiver Parameters
0xB2	Reference Station Differential Corrections Configuration
0xB3	RTK Engine Basic Parameters
0xB4	RTK Engine Extended Parameters
	Responses to commands
0xC1	Receiver Type, Firmware Version
0xC3	Storing Data to Flash Report
0xC7	Antenna Power Status

Table 6. The list of input messages

Message ID	Message
	Settings
0x40	Set Reference ECEF Coordinates
0x41	Set Serial Ports Parameters
0x42	Set Receiver Operation Mode
0x44	Set Output Data Rate
0x4C	Set 1PPS Parameters
0x4D	Enable/Disable SV
0x4E	Set NMEA Messages Configuration
0x4F	Set Binary Message Mask
0x50	Set Data Protocols Configuration
0x53	Set Local Time Offset and Leap Second
0x70	Set RTK Receiver Antenna Parameters
0x71	Set RTK Receiver Parameters
0x72	Set Reference Station Differential Corrections Configuration
0x73	Set RTK Engine Basic Parameters
0x74	Set RTK Engine Extended Parameters
	Queries
0x80	Query Reference ECEF Coordinates
0x81	Query Serial Ports Parameters
0x82	Query Receiver Operation Mode
0x84	Query Output Data Rate
0x88	Query GPS Almanac
0x89	Query GLONASS Almanac
0x8A	Query GPS Ephemeris
0x8B	Query GLONASS Ephemeris
0x8C	Query 1PPS Parameters
0x8D	Query Enable/Disable SV Status
0x8E	Query NMEA Messages Configuration
0x8F	Query Binary Message Mask
0x90	Query Data Protocols Configuration
0x93	Query Local Time Offset and Leap Second
0x9C	Query GPS Ionospheric Parameters
0x9D	Query GPS Time to UTC Conversion Parameters
0x9E	Query GLONASS Time to UTC Conversion Parameters
0xAF	Query Received Reference Station Parameters
0xB0	Query RTK Receiver Antenna Parameters
0xB1	Query RTK Receiver Parameters

Message ID	Message
0xB2	Query Reference Station Differential Corrections Configuration
0xB3	Query RTK Engine Basic Parameters
0xB4	Query RTK Engine Extended Parameters
	Commands
0xC1	Request Receiver Type and Firmware Version
0xC2	Restart Receiver
0xC3	Save Almanacs to Flash
0xC7	Enable/Disable Antenna Power

3.5.3 NMEA Messages

The module outputs five standard NMEA sentences according to two versions of NMEA 0183 standard – v2.x (with some extensions) and v4.10. The difference between message formats is as follows:

- v2.x:
  - Output messages: GGA, GSA, GSV, RMC;
  - GGA: talker ID – only GP;
  - GSA: talker IDs – GP for GPS, GL for GLONASS;
  - GSV: talker ID – only GP;
  - RMC: talker ID – only GP.
- v4.10:
  - Output messages: GNS, GSA, GSV, RMC;
  - Three GNS messages with talker IDs GN, GP and GL;
  - GSA: talker ID – only GN;
  - GSV: talker IDs – GP for GPS, GL for GLONASS;
  - RMC: talker ID – only GN.

Depending on the output data rate, recommended serial port baud rate is as follows (bit/s, minimum values):

- 1 Hz: 9600;
- 2 Hz: 19200;
- 5 Hz: 38400.

4 Specifications

Table 7. Performance characteristics

#	Parameter	Value	Notes
1	Channels	44	
2	Signals	L1 GPS C/A, GLONASS C/A, GALILEO E1B/C[5]	
3	Horizontal position accuracy, autonomous mode, m[1]	<2.5	CEP 50% HDOP<2, VDOP<3
3	Horizontal position accuracy, differential mode, m • Code-differential[1] • RTK[2]	<1.5 <0.015	RMS HDOP<2, VDOP<3
4	Altitude accuracy, autonomous mode, m[1]	<4.0	RMS HDOP<2, VDOP<3
5	Altitude accuracy, RTK, m[2]	<0.02	RMS HDOP<2, VDOP<3
6	Velocity accuracy, autonomous mode, m/s[1]	<0.02	RMS HDOP<2, VDOP<3
7	1PPS accuracy[1]	<30[2]	RMS HDOP<2, VDOP<3
8	TTFF, autonomous mode, s • Cold start[1] • Hot start[1] • Reacquisition[1, 3]	27 2 1	Typical value
9	RTK initialization time, s[2, 4]	<60	Typical value, short baseline
10	Sensitivity, dBm • Acquisition, cold start • Tracking and navigation	-145 -163	With external LNA
11	Dynamics • Acceleration, g • Velocity limit, m/s • Altitude limit, m	<4 515 18000	
12	Output data rate, Hz	1/2/5	
13	Interfaces	2xUART, LVCMOS	
14	Size, mm	22.1x15.9x2.8	
15	Weight, g	<1.5	
16	Operating temperature, °C	-40...+85	

Notes:

1. *All signals -130dBm;*
2. *Depends on signal reception conditions, number of satellites, baseline length;*
3. *10s signal off time;*
4. *RTK initialization time: time interval elapsed since standard accuracy output to fixed RTK output;*
5. *GALILEO support in future firmware release*

4.1 Electrical Parameters

The stresses beyond "Absolute maximum ratings" may lead to the module damage

Table 8. Absolute maximum ratings

Parameter	Value		Unit	Notes
	MIN	MAX		
V_{DD}	-0.5	4.6	V	
V_{BAT}	-0.3	4.0	V	
V_{ANT}	-0.3	3.75	V	
Input voltage level (V_I)[1]	-0.5	4.6	V	
Output short circuit current (I_O)[2]	-24	24	mA	
Antenna short circuit current (I_{ANT})	-	50	mA	
RF input power	-	10	dBm	ANT pin
ESD voltage level		2000	V	HBM
Storage temperature (T_{STG})	-40	+85	°C	

Notes:

1. *NRESET, RX0, RX1, ON_OFF;*
2. *1PPS, STATUS, TX0, TX1.*

Table 9. DC and AC operating electrical characteristics

Parameter	Symbol	Value			Unit	Conditions
		MIN	TYP	MAX		
Supply voltage	V_{DD}	3.0	3.3	3.6	V	
Backup battery voltage	V_{BAT}	1.6	-	3.7	V	
Antenna supply voltage	V_{ANT}	1.8	-	3.6	V	
VDD supply current, acquisition	I_{DD_ACQ}	-	65	-	mA	
VDD supply current, RTK solution	I_{DD_FIX}	-	48	-	mA	
VDD supply current, ON_OFF=0	I_{DD_OFF}	-	500	-	uA	
VDD supply current, NRESET=0	I_{DD_RESET}	-	35	-	mA	
Backup voltage current	I_{BAT}	-	15	-	uA	V_{DD} off, @+25°C
		-	40	-		V_{DD} off, @+85°C
Antenna bias voltage drop (between V_ANT and ANT pins)	V_{ANT_DROP}	-	100	150	mV	I_{ANT}=10mA
			200	240		I_{ANT}=20mA
			300	340		I_{ANT}=30mA
Antenna current	I_{ANT}	3	-	32	mA	
Output low-level voltage[1]	V_{OL}	-	-	0.4	V	I_{OL}=8мA
Output high-level voltage[1]	V_{OH}	2.4	-	-	V	I_{OH}=-8мA
Output low-level current[1]	I_{OL}	-	-	8	mA	
Output high-level current[1]	I_{OH}	-	-	-8	mA	

Parameter	Symbol	Value			Unit	Conditions
		MIN	TYP	MAX		
Input low-level voltage[2]	V_{IL}	-	-	0.8	V	
Input high-level voltage[2]	V_{IH}	2.0	-	-	V	
Pull-up resistance[2]	R_{PU}	-	75	-	KΩ	
RF						
Effective noise figure	NF	-	5	-	dB	

Notes:

1. *1PPS, STATUS, TX0, TX1;*
2. *NRESET, RX0, RX1, ON_OFF.*

5 Mechanical Specifications

5.1 Outline Drawing

Dimensions: mm.

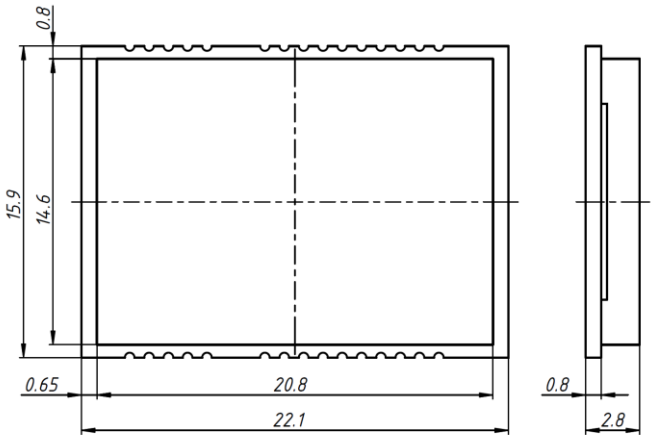

Figure 5. Outline drawing

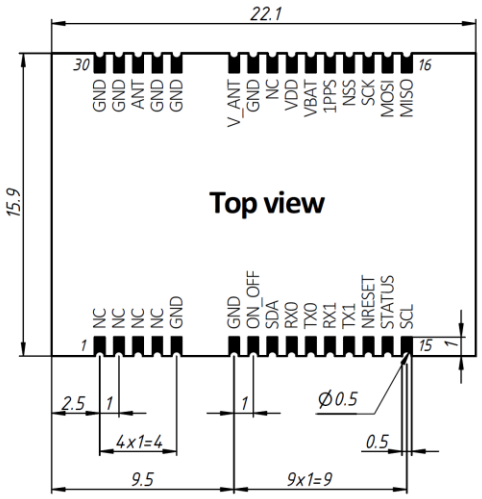

Figure 6. Pad allocations

5.2 Recommended PCB Footprint

Dimensions: mm.

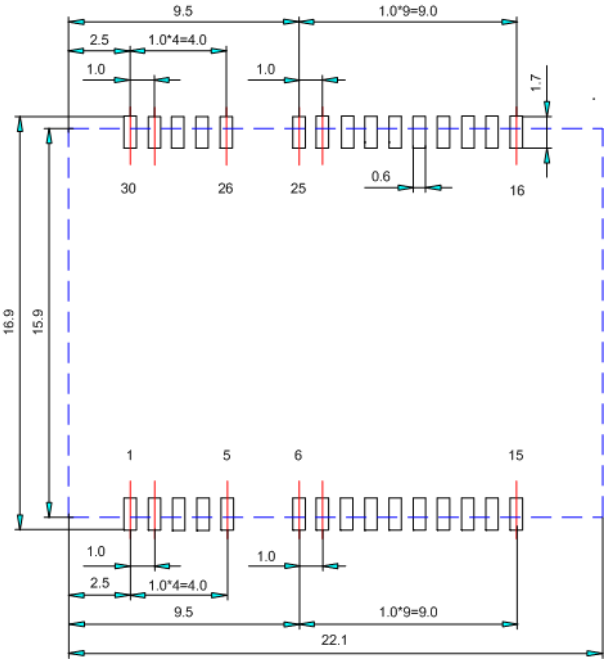

Figure 7. Recommended PCB footprint

PCB routing guidelines:

1. Antenna should be connected to ANT pad via micro-strip line. Its length should be kept as short as possible and impedance as close as possible to 50 Ohm;
2. Ground pads should be connected to the PCB ground in shortest way;
3. PCB signal lines should be moved from antenna input as far as possible;
4. Avoid routing signals (especially clock and high-speed) beneath the module.

5.3 Marking

Marking details (Figure 8):

- GeoS-5 RTK: product name;
- 52410000001: serial number;
- yyww: production time code (year, week);
- Pad #1 identifier;
- QR code.

Figure 8. Marking example

6 Handling

6.1 Package

Dimensions: mm.

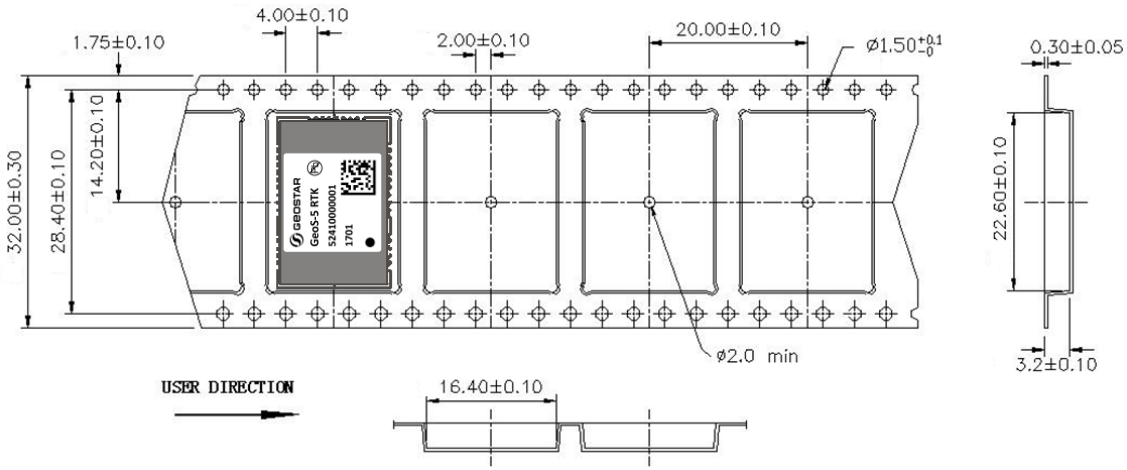

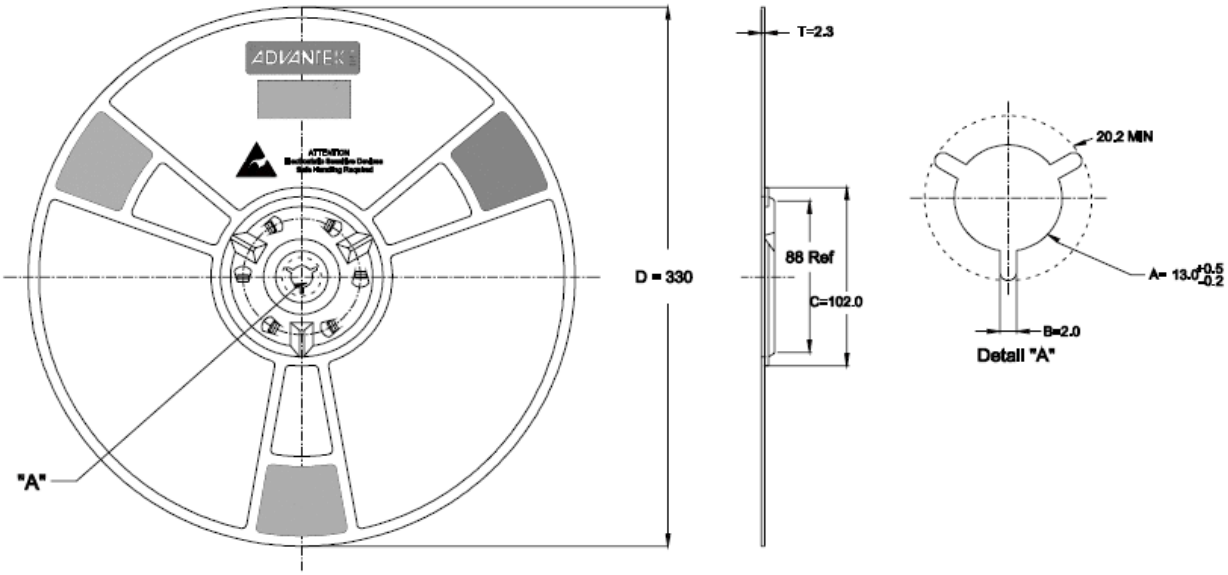

Figure 9. Package details: 1000pcs/reel

6.2 ESD Handling

GeoS-5 RTK is ESD sensitive device

Although the module contains built-in ESD protection circuitries, conventional precautions should be taken during transportation, storage and assembly into the user's equipment. Refer to IEC 61340-5-1 and 61340-5-2 for general rules of ESD protection.

6.3 RoHS Compliance

The product is manufactured in compliance with RoHS directive (2011/65/EU RoHS).

7 Recommendations on HW Connections

7.1 Typical Connection Diagrams

Typical connection diagram is depicted in Figure 10.

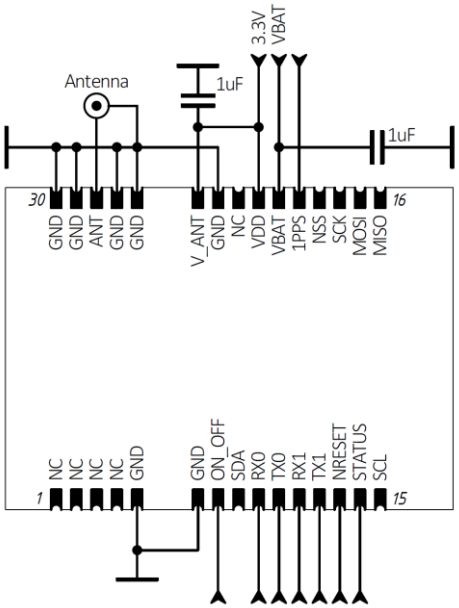

Figure 10. Typical connection diagram

7.2 Requirements to VDD Regulator

Since the supply current varies significantly during operation from the lowest to the highest limit specified in Table 9, it's recommended to use DC-DC regulator for VDD with maximum load current at least 150mA.